# UNLOCK THE MAJESTY!

Don't limit yourself, Autom8!

## PRODUCT DESCRIPTION

Introductiontothe Structure of the Indoor Lock

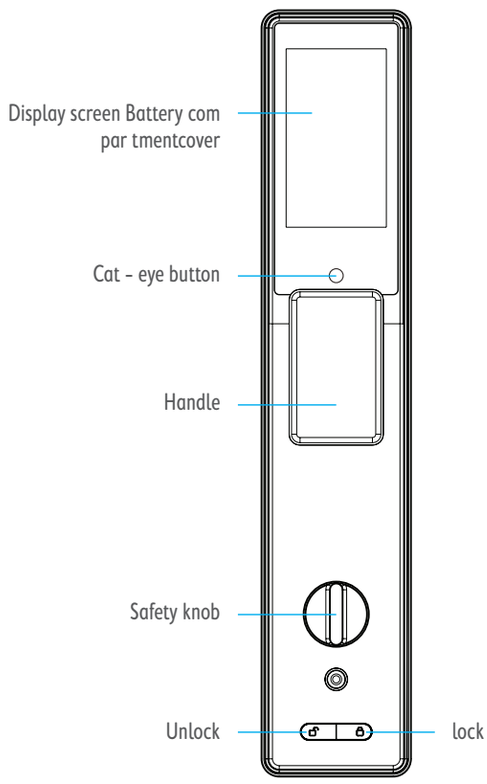


Introduction to the Structure of the Outdoor Lock

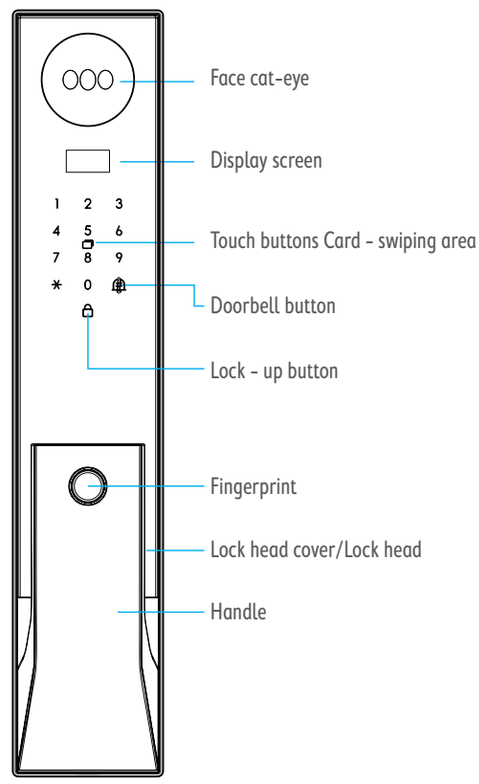

Introduction to the Structure of the Lock Body

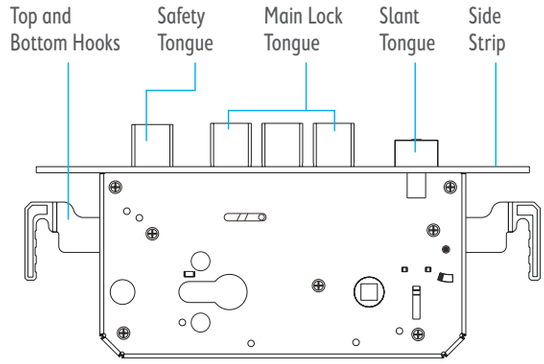


The picture is for reference only. The actual product shall prevail.

## PRODUCT SPECIFICATIONS

- Outer lock dimensions: 394.877.821.Bmm
- Inner lock dimensions: 424.183.133.3mm
- Smart door lock security level: Grade C
- Environmental adaptability: Level II
- Operating temperature: -25°C to 55°C
- Operating humidity: 25%- 93% RH, no condensation
- Door opening methods: Palm vein, face fingerprint, password,
- card, key, App, remote unlocking, double verification
- Fingerprint module type: FPC semiconductor fingerprint sensor
- Total user capacity: 9 groups of administrators, 191 groups of
- general users, with a total capacity of 200 groups
- Fingerprints: Up to 50 pieces
- Faces: Up to 100 pieces
- Service life (number of times): 3000 times
- Low battery alarm: <7.0±0.2V
- Power supply: 7.4V lithium battery
- Executive standard: GA 374-2019

## ACCESSORY LIST

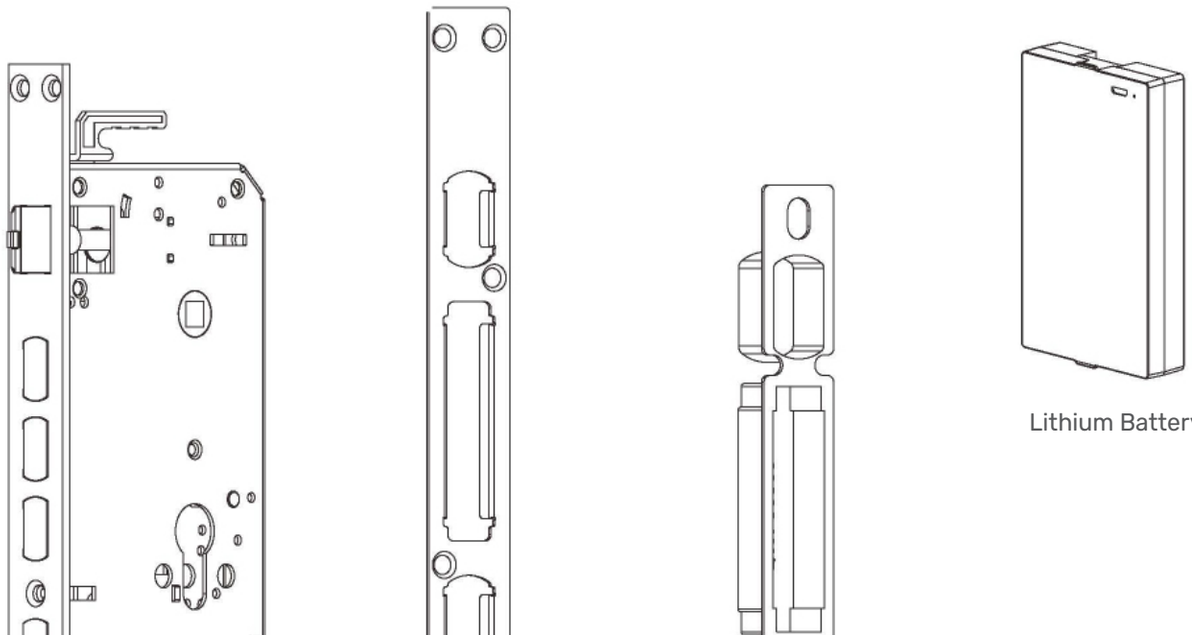

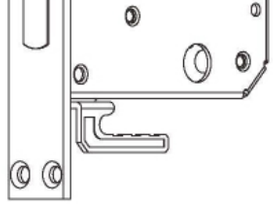

Lock Body

Lock Strike Plate

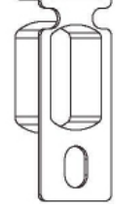

Lock Box

- Instruction Manual
- Drilling Diagram
- Accessory Package
- 2 Smart Cards
- 2 Mechanical Keys

1 Select accessories of different specifications according to the thickness of the door
2 The accessory package configured by default from the factory is suitable for doors with a thickness of 45- 100mm. If other specifications are needed, please contact the merchant.

## DOOR OPENING DIRECTIONS

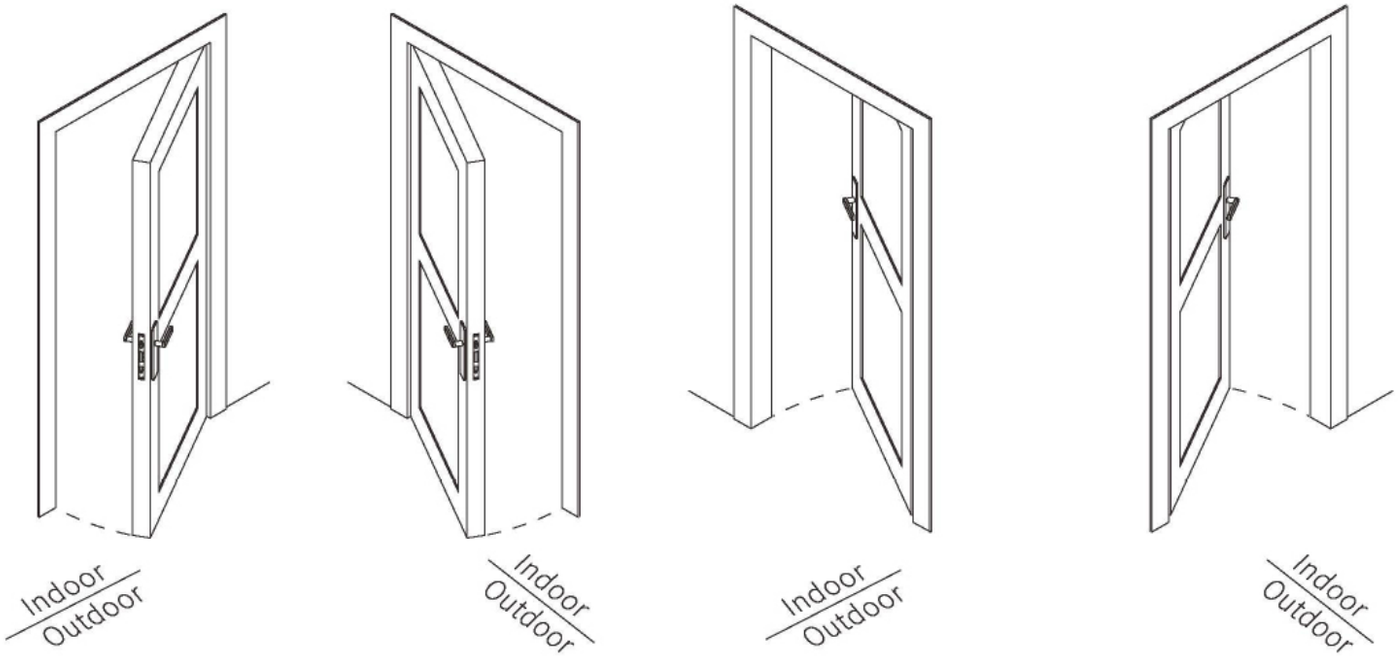


| Right Open Outward | Left Open Outward | Right Open Inward | Left Open Inward |
|---|---|---|---|

## DOOR DRILLING DIAGRAM

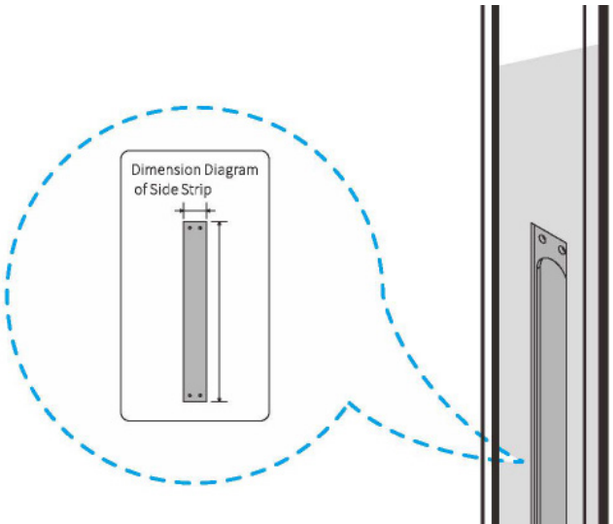


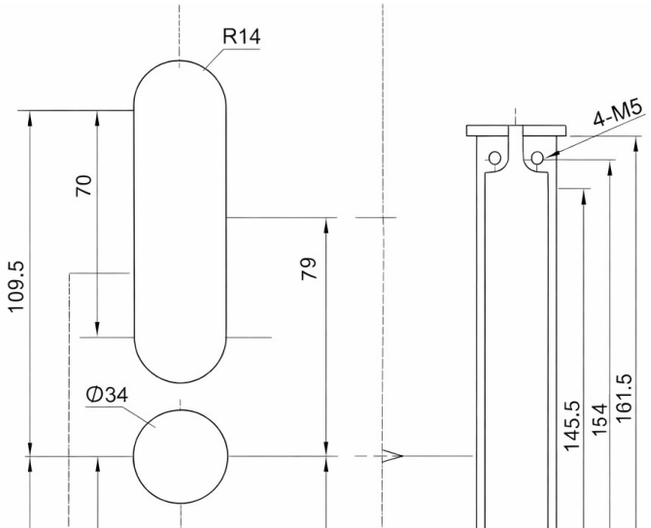

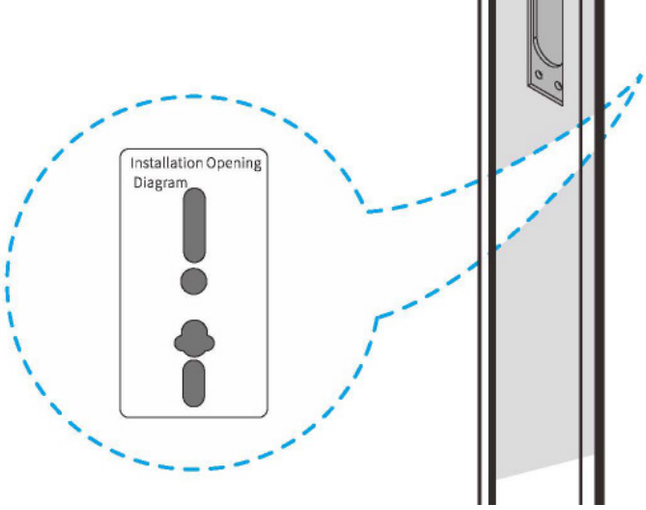


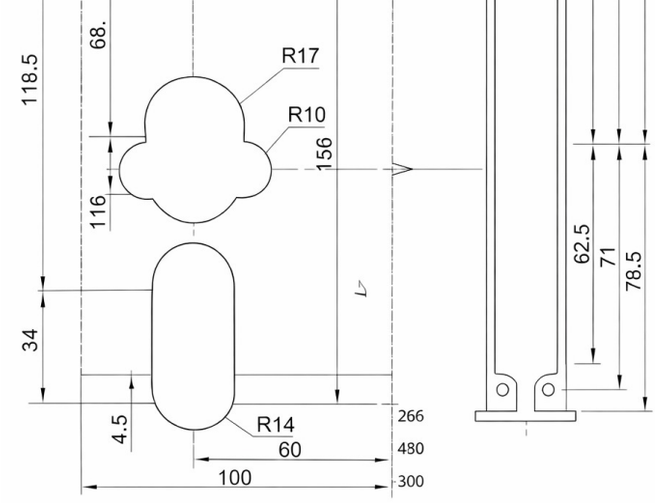


## LOCK BODY REVERSAL SCHEMATIC DIAGRAM

1. Loosen the screw shown in the diagram.
2. Toggle the-Latch Tongue Direction - adjusting Tab - to the far right to make the latch tongue pop out.
3. Rotate the latch tongue by 180” and then press it into the original position of the lock body
4. Fix the loosened screw back to its original position again, and the reversal is successful.

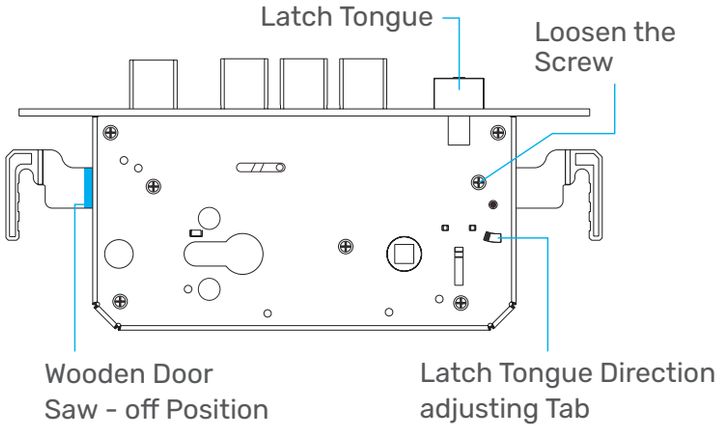


For wooden doors, use a square rod to push out the main lock tongue and the top and bottom hooks. Use a hacksawtosawoffthe top and bottom hooks along the root at the position identified in the diagram. Then, use the square rod to push out or retract the main lock tongue, and ensure it operates smoothly.

## INSTALL THE LOCK BODY

For anti : theft doors, use M5 X 10 Screws ; for wooden doors, use M4 X 20 self-tapping screws

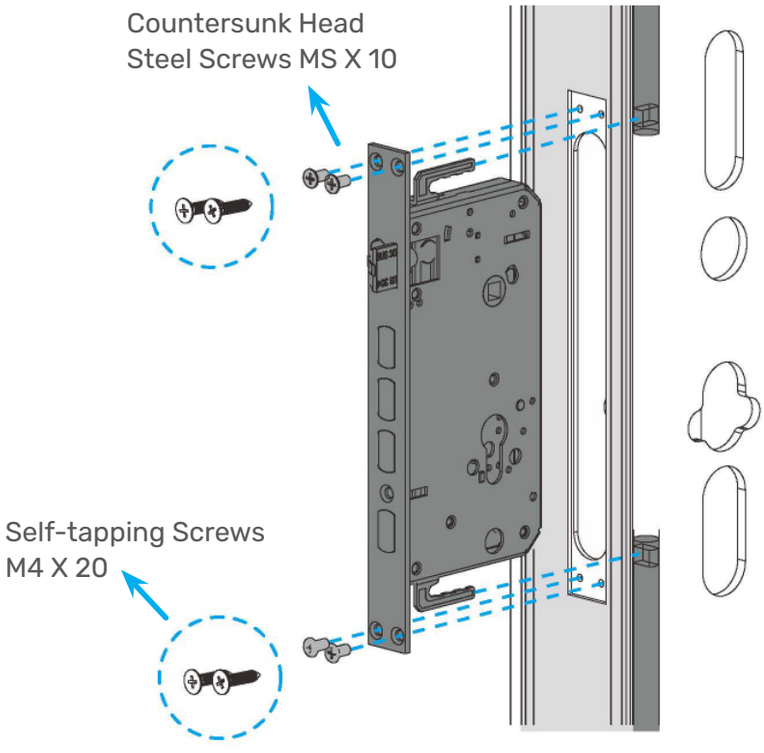

# INSTALL THE AUTOMATIC LOCK HEAD

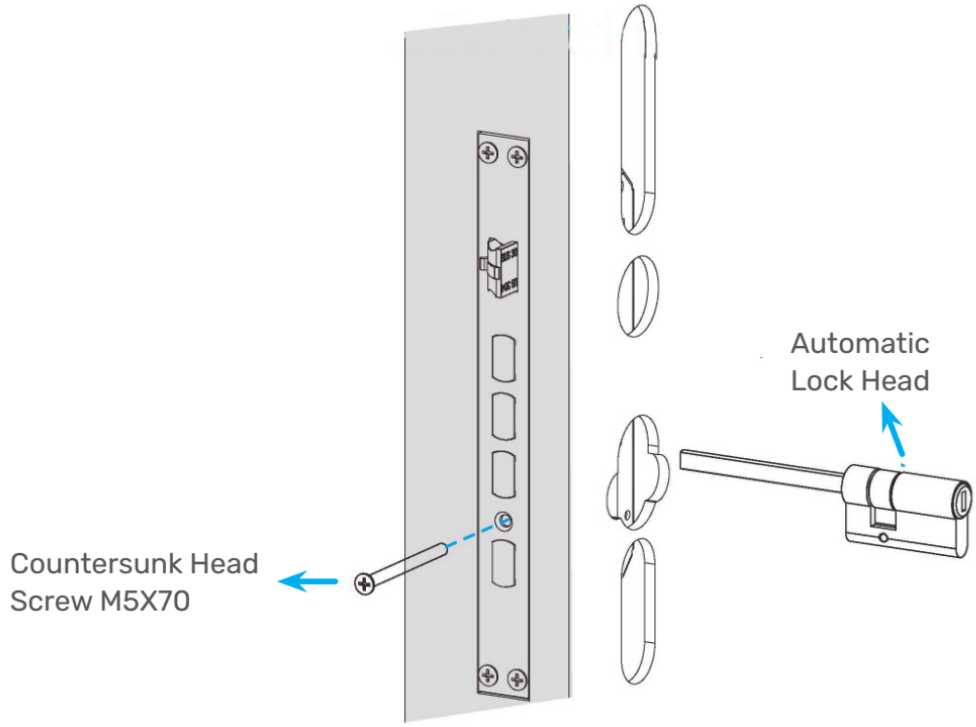


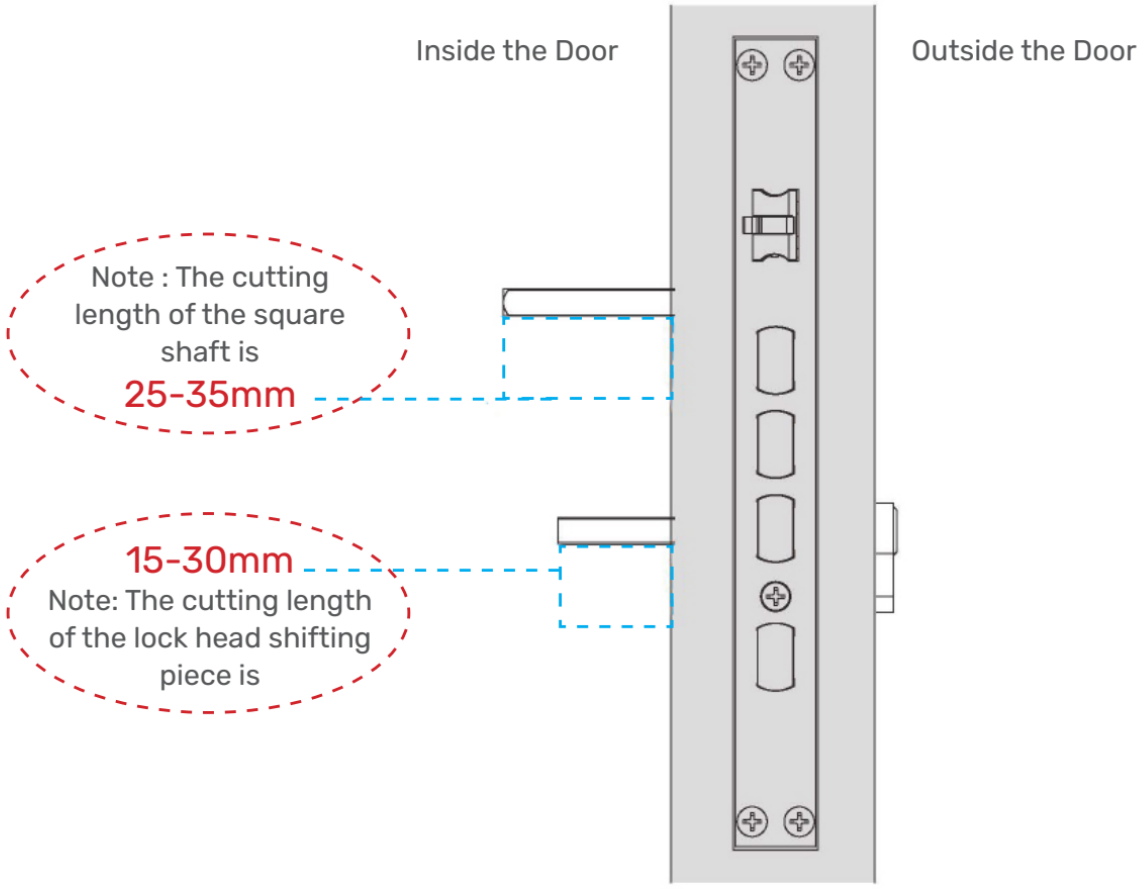


# INSTALLATION OF FRONT PANEL ACCESSORIES

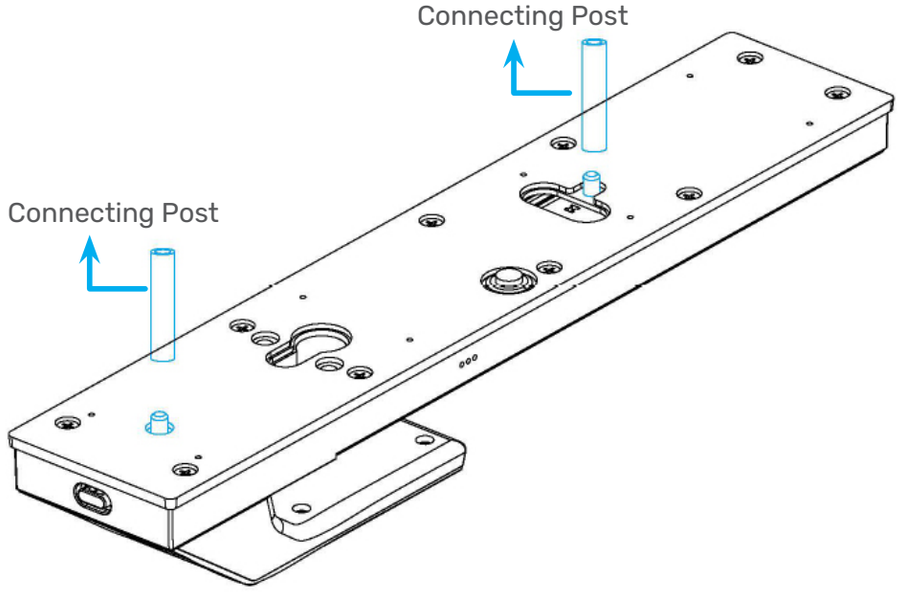


## INSTALL THE FRONT PANEL

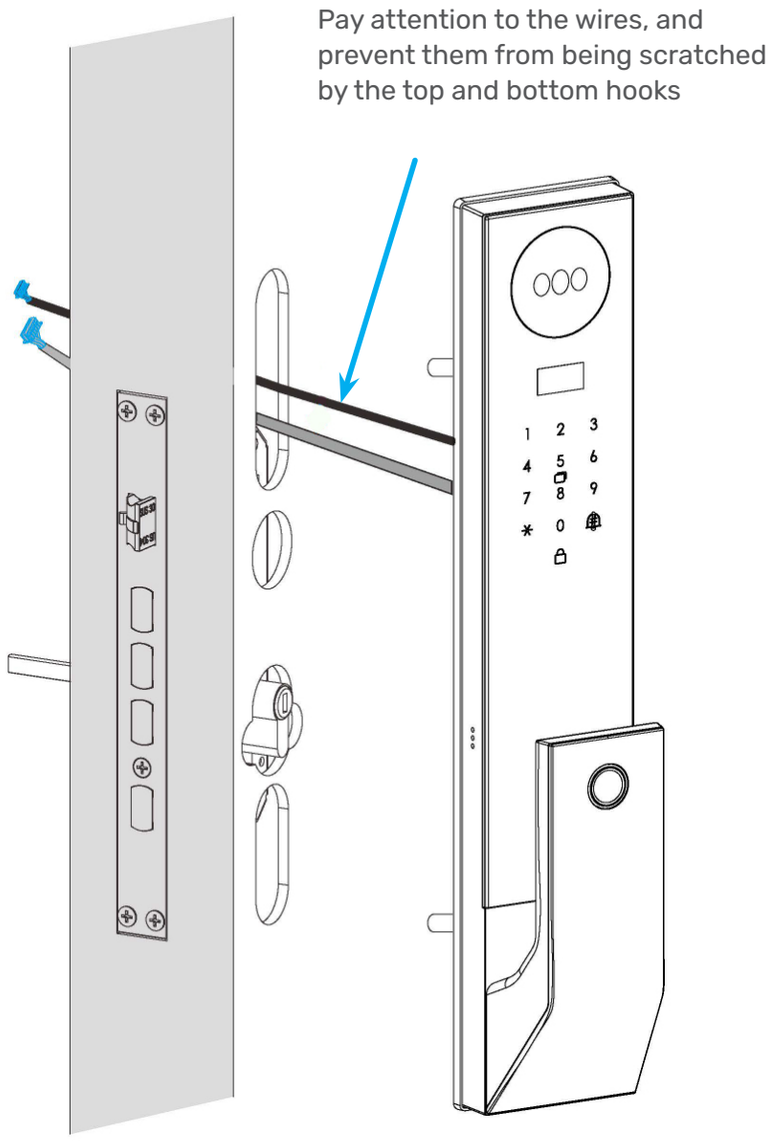


## INSTALLATION OF THE REAR PANEL, BATTERY, AND BATTERY COMPARTMENT COVER

1. First, use MS screws to fix the rear panel and the rear cushion;
2. Then insert the connecting wire into the interface of the main board at

the back;

3. Put in the square shaft (insert the end of the square shaft that is shorter from the “ear” into the lock body), and place the square shaft spring into the square shaft hole of the panel (insert the large end first);
4. Put on the rear panel, and it must be aligned with the square shaft, the safety plate, and the lock head shifting piece; use three M4screws to fix the front panel
5. Then install the battery and the battery compartment cover.

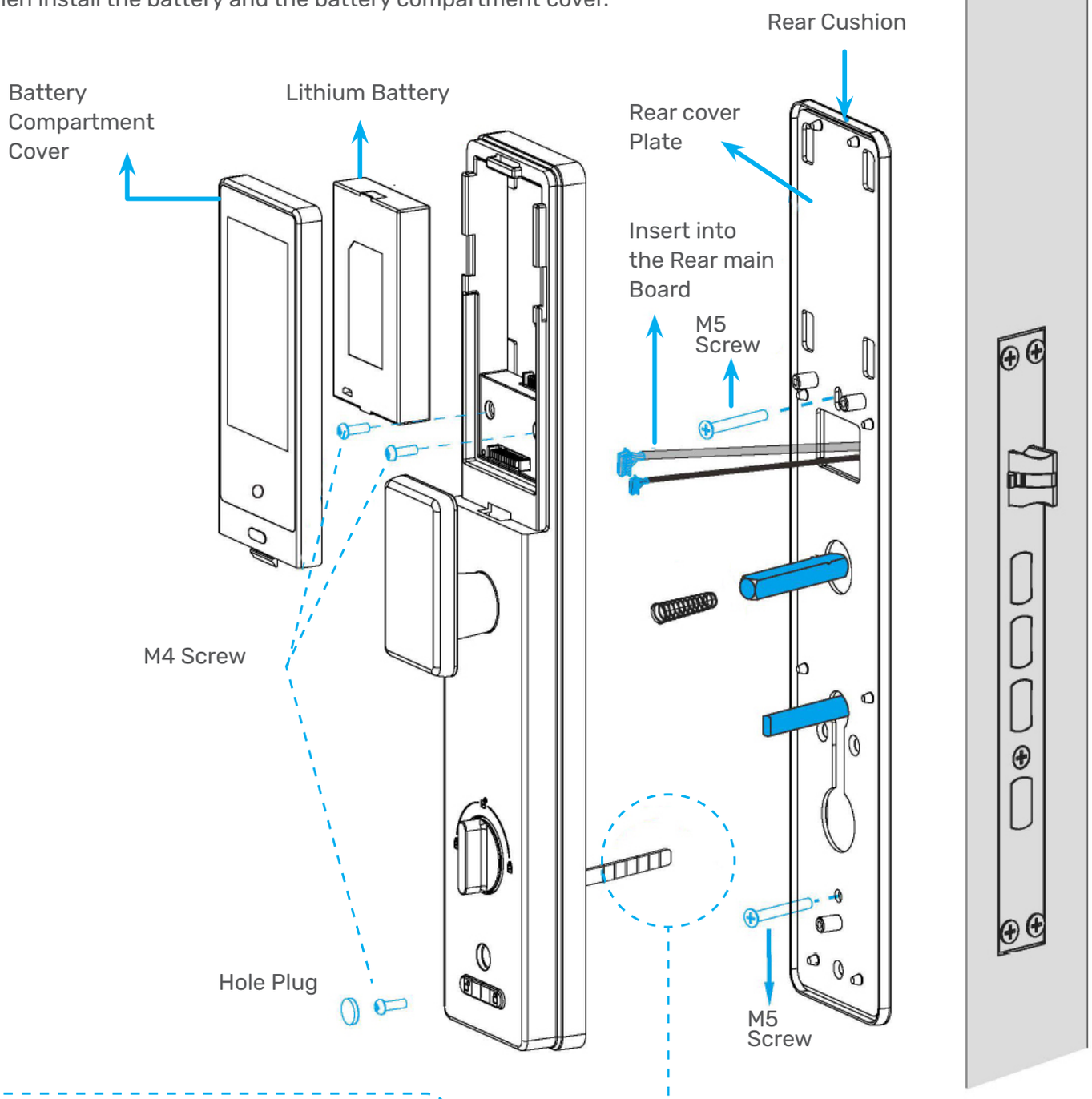


Install the shifting piece and fix it on the safety knob with a cotter pin Cut off the safety latch shifting piece to make its length slightly less than the door thickness (with the fewest possible grids)

## INSTALL THE BUCKLE PLATE AND BUCKLE PLATE BOX

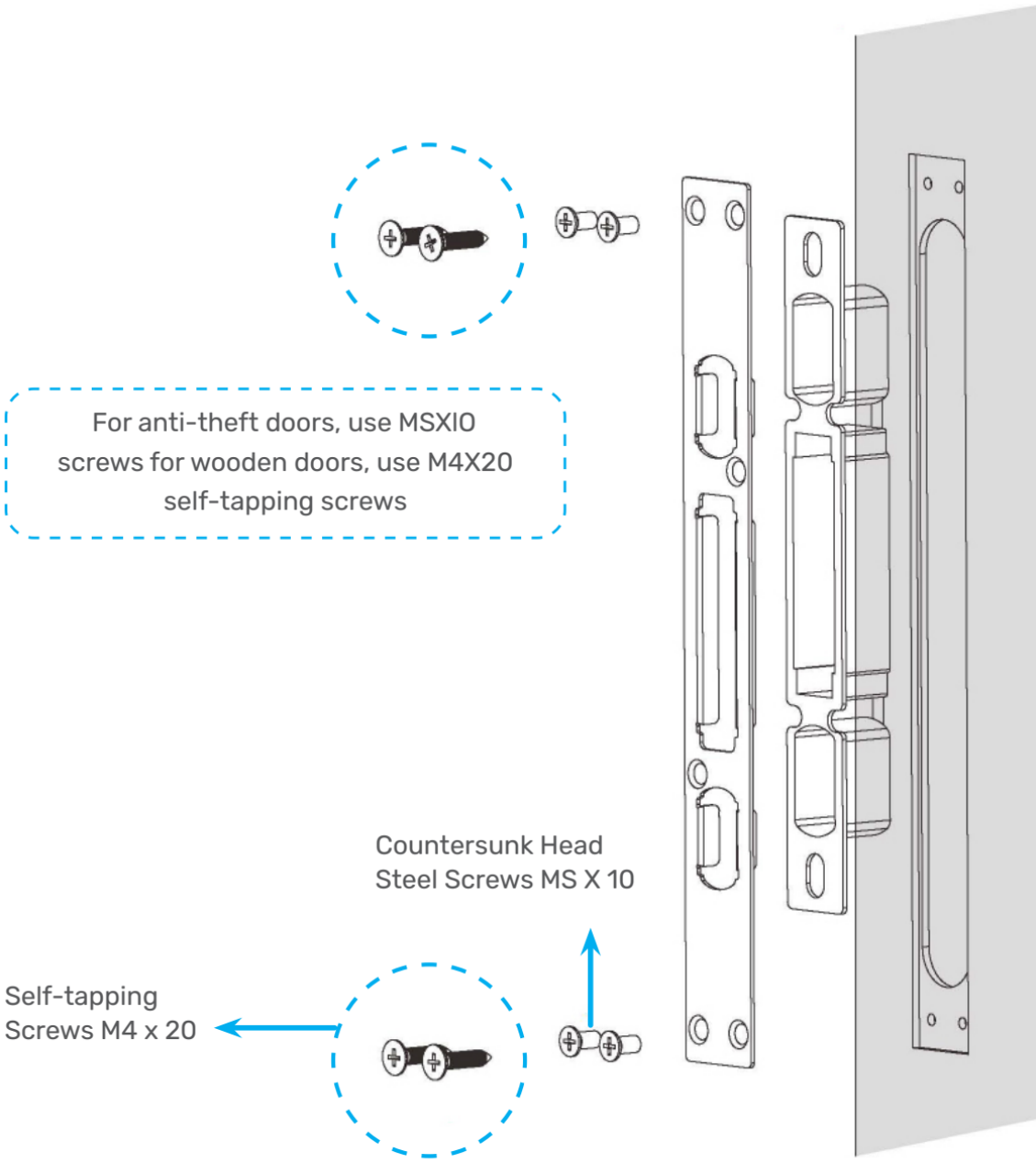


# INSTALLATION ACCEPTANCE

## ACCEPTANCE STANDARDS :

Before Power- on The edge line of the panel is parallel to the doo edge The rear handle rotates smoothly without jamming. When the rear handle is rotated upward to lock, the main deadbolt extends. When rotated, the latch bolt and main deadbol retract. After inserting the key, the door can be opened by smooth rotation, and rotating the safety knob allows the safety deadbolt to extend and retract.

## AFTER POWER- ON

1. Thetouch- panel keys light up, and the fingerprint functions properly
2. The function buttons operate as intended
3. Forcefully pulling the front handle does not trigger the anti -

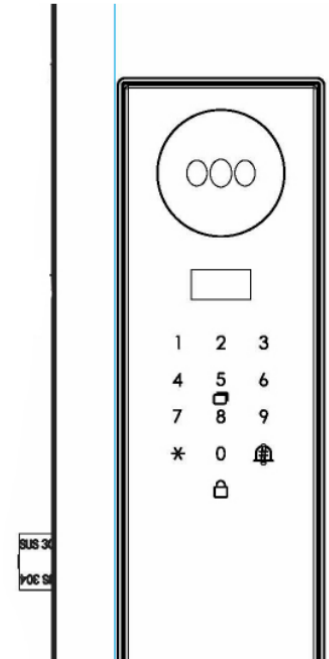

theft alarm

4. After successful verification, the latch bolt and main deadbolt retract automatically and lock automatically after a short while After the above steps are successful, close the door for acceptance
5 After closing the door, the latch bolt, main deadbolt, and safety deadbolt can all extend and retract smoothly.

   Note: The top and bottom deadbolts move in sync with the main deadbolt.

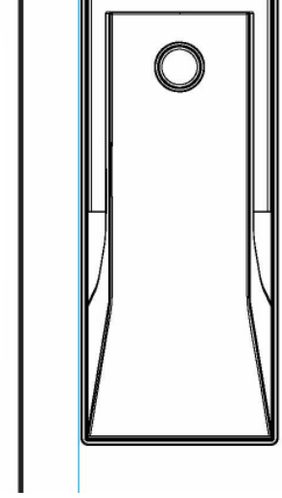

### INSTALLATION ACCEPTANCE

1. After setting up face recognition, passwords, fingerprints, and cards, confirm that the registered information can unlock the door lock (including the mechanical key)
2. After installation, test opening and closing the door at least three times

### PRECAUTIONS BEFORE USE

1. Please read the instruction manual carefully before use and familiarize yourself with the functions of the door lock

# IMPORTANT PRECAUTIONS

Do not store or use flammable items, such as gas, paint, gasoline, etc., near the smart lock. Also, it is prohibited to place flammable and explosive items such as alcohol and gasoline near the smart lock to prevent explosions and fires.

The company shall not be liable for any product damage/destruction, property damage other than the product, and personal injury caused by improper installation, debugging, maintenance by the user or a third party, or use of third - party modules not authorized by the company!

# FUNCATION & OPERATION

## OPERATION INSTRUCTIONS

1 There are 9 administrators, with numbering range 001-009. Each can be face, fingerprint, password, or card.
2 There are 191 general users, with numbering range 010-200. Each can be face, fingerprint, password, or card.
3 Press “” + “#” to enter the settingmenu.
4 Press ‘”’ + “#” , and it will prompt “Please verify administrator”
5 After successful administratorverification, enter the main system interface.

*Note : The initial password is 123456. You can use the initial password to enter settings or unlock.*

## INITIAL STATE

**METHOD 1 : QUICK INITIALIZATION VIA THE “UNLOCK/LOCK BUTTON” ON THE REAR PANEL**

Press and hold the “Unlock Button” and “Lock Button” simultaneously. After entering the initialization interface, the voice prompts “Restore factory settings, please confirm” . Press* to cancel, press #to confirm. After pressing # to confirm, the voice prompts: “I nitializing ... “ “Initialization successful” .

**METHOD 2 : ENTER THE SETTING MENU FOR OPERATION**

- Press “” + “#” , and after successful administrator verification, enter the main setting menu.
- Press number key “4” to select “System Query” . The main interface is as follows: !.Record Management 2. Storage Information 3. Version Information 4. Restore Factory Settings
- Press number key “4” to select “Restore Factory Settings”. The voice broadcasts “Restore factory settings, please confirm” .

After pressing # to confirm, the voice prompts: “Initializing ... “ “Initialization successful” .

*Note : All user information will be cleared after initialization.*
*After initialization, any face, fingerprint, card, or password (123456) can unlock*

## FACTORY SETTINGS MENU

1 In the initialized state, press 888# to enter the factory settings menu:

In the initialized state, press 888# to enter the factory settings menu → Door Opening Direction → 1. Left- opening door 2.Right- opening door

→ Motor Torque → 1. Low torque 2. Medium torque 3. High torque

→ Aging Mode → Press “3” to start aging, press* to exit aging mode

2 Enter “4” and press “#” to confirm, enter quick open/close anti - pry.
3 Enter “5” and press “#” to confirm, enter quick open/close body sensing.
4 When no administrator is added, enter “999” and press “#” to confirm, enter quick start aging mode.
5 Enter “0” and press “#” to confirm, enter quick information query.

## NTER DOOR LOCK FUNCTION MANAGEMENT

1 Press(*) and (#) keys. According to the voice prompt, enter the initial password (initial password: 123456. If changed, please verify the administrator) to enter the system.

In initial mode, press “” + “#” keys and enter the system according to voice prom pt → 1. User Management 2. Remote Management 3. System Settings 4. System Query

# 1. USER MANAGEMENT

## 1.1 ADD USER

### ADD ADMINISTRATOR USER

Add User → Add Admin -istrator User → 1. Enroll Palm Vein 2. Enroll Face Information 3. EnroFingerprint Information 4. Enroll Password/Card

### ADD GENERAL USER

Add User → Add General User → 1. Enroll Palm Vein 2. Enroll Face Information 3. Enro Fingerprint Information 4. Enroll Password/Card

### ADD GUEST USER

Add User → Add Guest User →

1. Enroll Palm Vein
2. Enroll Face Information
3. Enro Fingerprint Information
4. Enroll Password/Card

**ADD GUEST USER**

Add User → Add Coercion User →

1. Enroll Password Information
2. Enroll Card Information
3. Enro Fingerprint Information

## 1.2 ADD USER

**DISABLE USER**

Edit User → Disable User →

ON-User Disble Effective

**RE-ENER**

Edit User → Re-enroll →

1. Enroll Plam Vein
2 Enroll Face Information
3 Enroll Fingerprint Information
4 Enroll Password/Card

**GUEST SESSION**

Add User → Add Guest User →

1. Enroll Palm Vein
2. Enroll Face Information
3. Enro Fingerprint Information
4. Enroll Password/Card

**ADD GUEST USER**

Edit User → Guest time period →

Enter the guest user number for which the time period needs to be set Enter the valid start date and end date, press#toconfirm.

Enter the door-opening time periods, 3 time oeriods can be set

## 1.1 ADD USER

**DELETE BY NUMBER**

Delee User → Delete by Number →

Enter the user number to be deleted, press# to confirm. The voice prompts “Deletion Successful” . The system will delete the user information under this number.

**DELETE BY TYPE**

Delee User → Delete by Type →

1. Delete All Palm Veins
2. Delete All Faces
3. Delete All Fingerprints
4. Delete All Cards

Inthis interface, the administrator currently loggedinto tsetting inter face will not bedeleted.

**DELETE ALL**

Delee User → Delete All →

Press “3” to perform the operation of deleting all users.

Inthis interface, the administrator currently loggedinto tsetting inter face will not bedeleted.

## 1.2 REMOTE MANAGEMENT

Remote Managmenrt → Add Remote User → Wifi Hotspot

Edit User → Delete Remote User → Delete Remote User Press ‘#’ to confirm

## 1.3 SYSTEM SETTINGS

System Setting → Time Setting →

Enter the corresponding time and press “#” to confirm.

Note: Time format Date 2020-05-01 Time

System Setting → Language and Volume →

1. Chinese
2. English
3. Low Volume
4. High Volume

System Setting → Unlocking Settings →

1. Single Unlock
2. Combined Locking
3. Disable Unlocking
4. Anti - pry Ala rm

System Setting → Locking Settings →

1. Re-locking Time
2. Delayed Locking
3. Human Body Sensing
4. Dwell Setting

## 1.4 SYSTEM QUERY

System Query → Record Menagement →

1. Query in Order (2/8 for page up/down)
2. Query by Date
3. Clear Records

System Query → Storang Information →

On the system query interface, select key “2” to query the storage information of users and records.

| | | | | |
|---|---|---|---|---|
| System Query | → | Version Information | → | On the system query interface, select key “3” to query the machine version information. |
| System Query | → | Restore Factory Settings | → | On this interface, enter key “4” and press “#” to confirm, then the system will perform the initialization operation. |

## OTHER FUNCTION INSTRUCTIONS

**DOORBELL :** Press the doorbell button, and the doorbell will ring twice continuously

**LOW BATTERY ALARM :** When the battery is low, a voice prompt will appear every time the door lock is awakened

**ANTI-PRY ALARM :** when the anti-pry alarm is enabled (disabled by default), an alarm will sound if he door lock is pried

**HUMAN DETECTION :** The effective recognition distance of human detection is 0.5-1.2 meers

# DOOR OPENING METHOD INSTRUCTIONS

### PALM VEIN DOOR OPENING

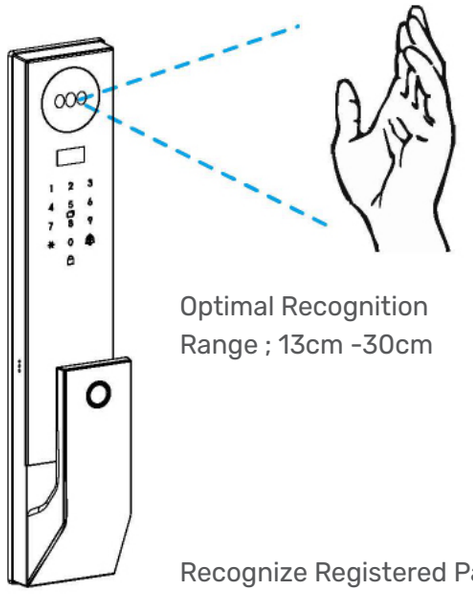

Optimal Recognition Range ; 13cm -30cm

Recognize Registered Palm Veins

### FACE RECOGNITION TO OPEN THE DOOR

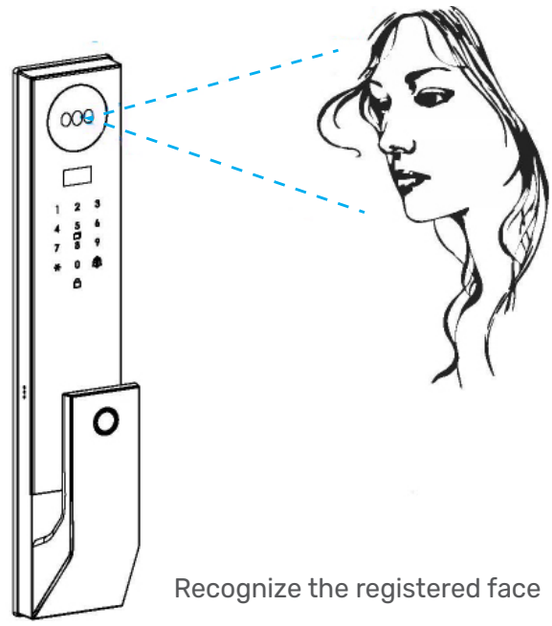

Recognize the registered face

### PASSWORD TO OPEN THE DOOR

Wakeup the keypad

Enter the registered password

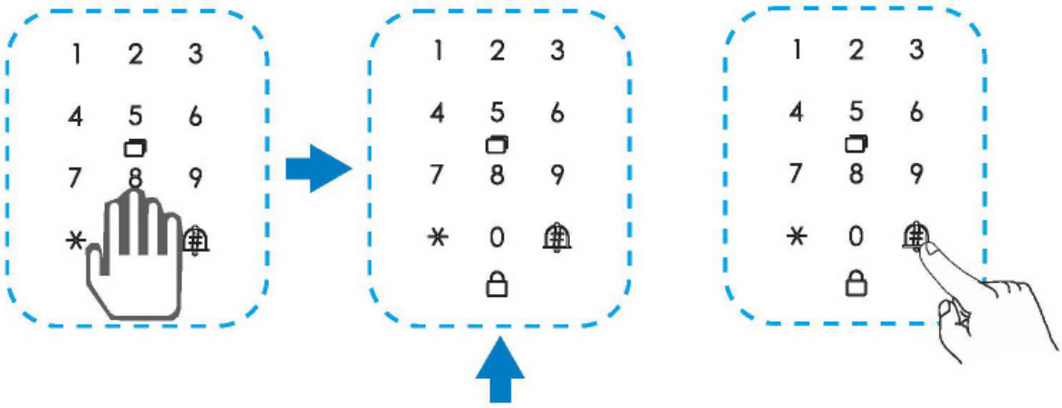


Enter# key to open the door

Supports 16-digit dummy password. Add arbitrarily before and after any digits + correct unlocking password+ any digits

## FINGERPRINT TO OPEN THE DOOR

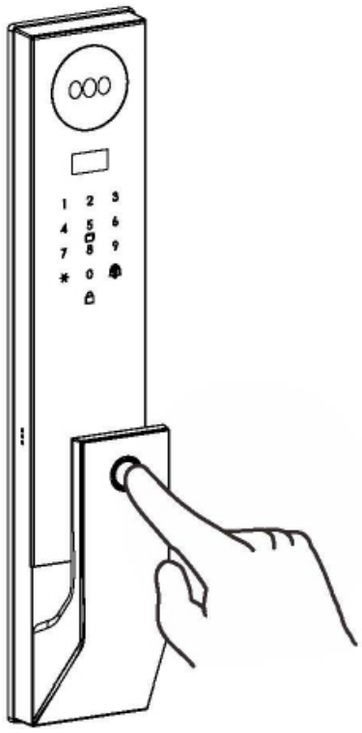

Recognize the registered fingerprint

## SMART CARD TO OPEN THE DOOR

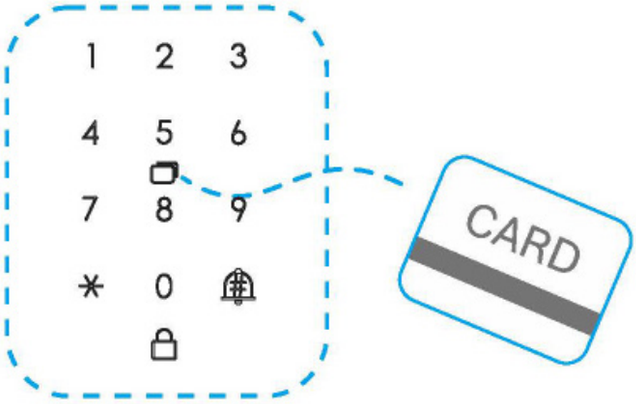


Recognize the registered card

## EMERGENCY KEY DOOR OPENING

When turning the handle, be carefu l of the handle corner

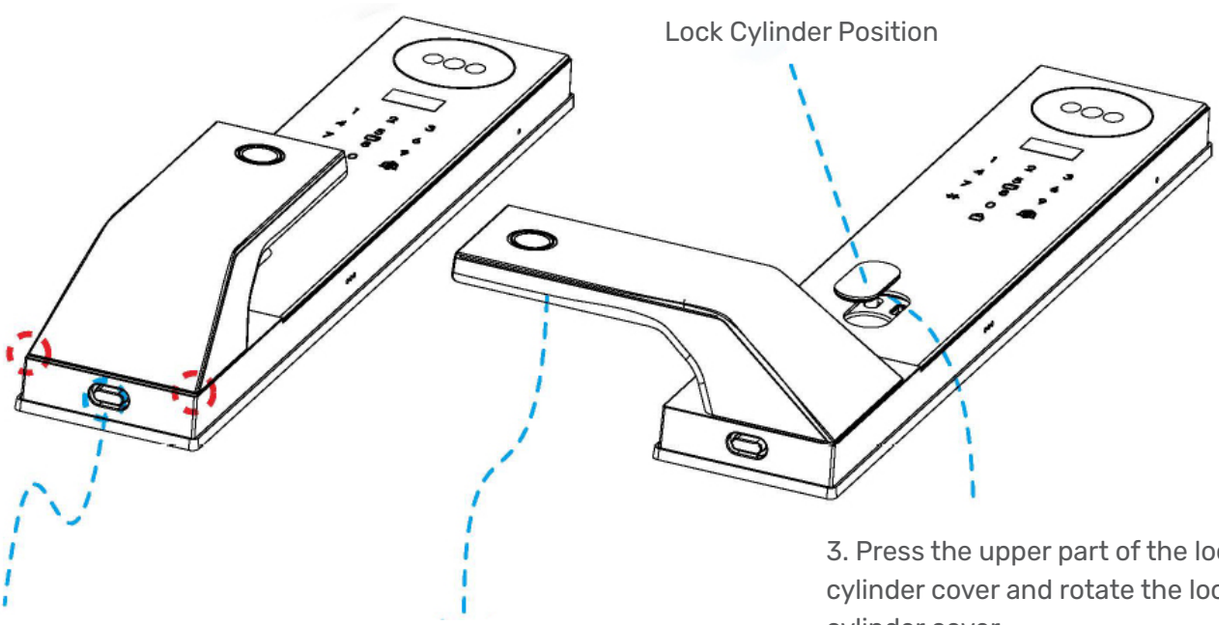


1. Press the handle unlock button

2. Rotate the handle left or right

3. Press the upper part of the lock cylinder cover and rotate the lock cylinder cover

## EMERGENCY POWER DOOR OPENING

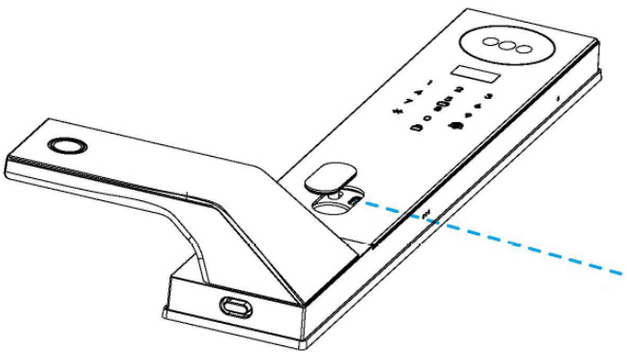

Emergency Power Type- c Interface Insert a power bank in emergency situations

**LITHIUM BATTERY CHARGING METHOD**

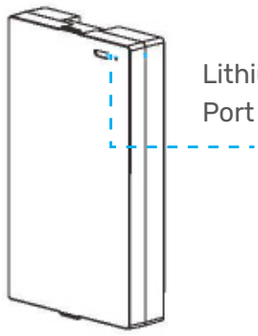


*The battery is a consumable part and is not covered under warranty. Please charge it in a standardized manner.*

**IT IS RECOMMENDED TO USE A MOBILE PHONE 5V CHARGER**

1 During charging, it shall not be higher than the ma~imum charging voltage; during discharging, it shall not be lower than the minimum working voltage.
2 Before charging, the lithium battery does not need to be specially discharged.
3 During charging, the lighium bettery red light is always on and remains on when fully charged.
4 To not damage the battery life, it is bestto charge slowly.
5 when the lithium battery's red light flashes, it indicatesthat the battery has a certain low
6 If the lithium battery is not used for a long time, ensure the battery voltage is 8.4V.
7 A7.4 V lithium-ion Battery is fully charged to 8.4 V)
*The batterry will have safety hazards. To ensure the effective safety functions of the electrical applianc, do not disassemble the battery conduct any inspections.

# PEEPHOLE OPERATION INSTRUCTIONS

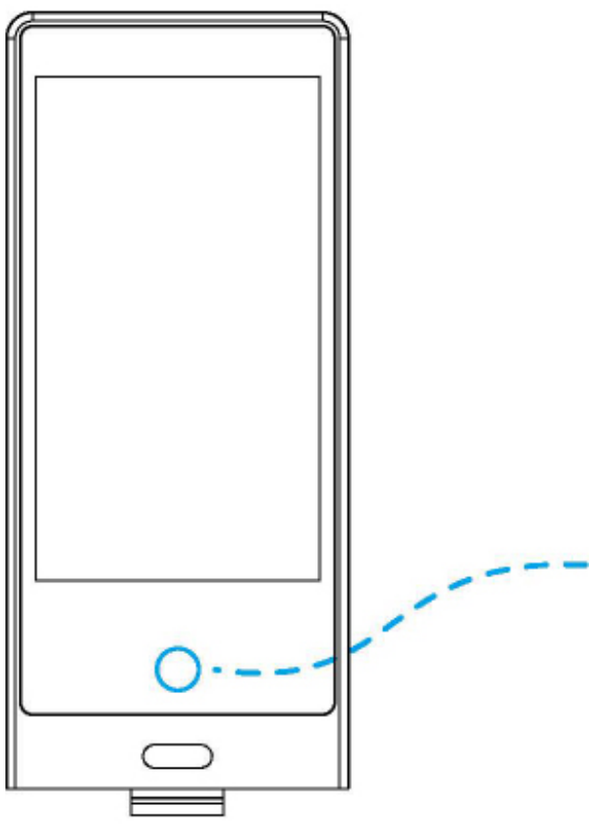

1 Inscreen-off state, tap to turn on the screen
2 In screen - on state, tap to turn off the screen
3 In screen- off state, long- press to display the version number

# WARRANTY AND SERVICE

**FRIENDLY REMINDER**

If your smart lock malfunctions, contact your seller or call the customer service hotline. Before on - site service, please provide the following information: detailed address and phone number, fault description, purchase and receipt dates, product model, product serial number. The above information helps to better serve you and can also save you unnecessary expenses.

**WARRANTY INSTRUCTIONS**

1. Implemented in accordance with the “Consumer Rights Protection Law of the People’s Republic of China”.
2 The warranty service only covers product quality issues under normal use as per this product manual. The warranty does not apply to product damage or destruction caused by any of the following situations: CD Caused by human factors
3 Improper installation, commissioning, or use not in accordance with this product manual;
4 Unauthorized repair, modification/alteration of the product (including damage to anti tamper labels, except for normal wear and tear);
5 Caused by user intent or negligence;
6 Force majeure;
7 All damage and losses caused by product usage environment conditions (e.g., power supply, temperature, humidity, electric field, magnetic field, etc.) that are beyond the company’ s control are not covered by the free warranty.
8 Other reasons not attributable to the product’ sown quality.

**THANK YOU FOR YOUR PURCHASE**

We’re honored you chose **AUTOM8**

Experience the perfect blend of
**SECURITY, TECHNOLOGY, AND ELEGANCE.**

Welcome to the Future of Smart Living.

**INDIA :** 1800 309 3892 | sales@autom8india.com | www.autom8india.com
**UAE :** +971545653353 | info@autom8uae.com | www.autom8uae.com